MASON INDUSTRIES, Inc.
Manufacturers of Vibration Control Products
350 Rabro Drive
Hauppauge, NY 11788
631/348-0282
FAX 631/348-0279
Info@Mason-Ind.com
2101 W. Crescent Ave., Suite D
Anaheim, CA 92801
714/535-2727
FAX 714/535-5738
Info@MasonAnaheim.com
www.Mason-Ind.com

JOB NAME _____
CUSTOMER _____
CUSTOMER P.O. _____
MASON M.I. _____
DWG. NO. _____

RISFD

RUBBER IN SHEAR FLOOR DAMPER

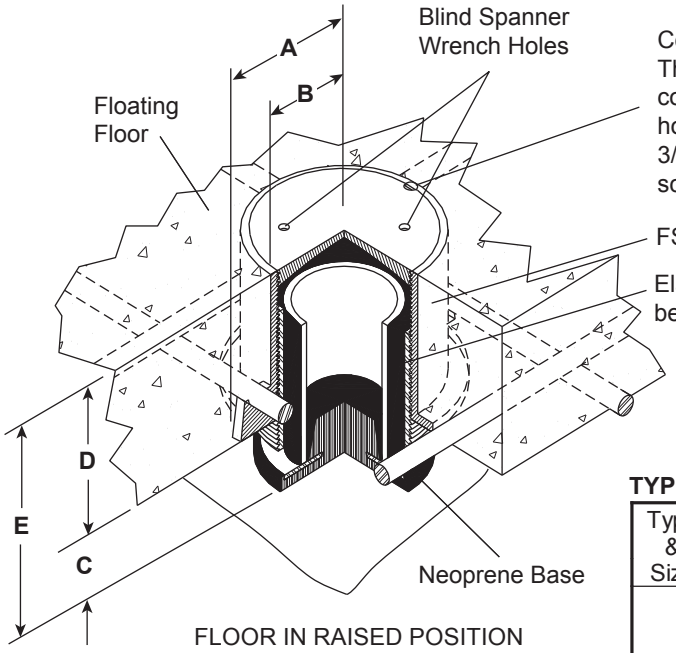

Cover must be flush. Then line up notch in cover with notch in housing and install 3/8" dia. brass set screw to lock cover.

FSC Casting

Elastomer designed to provide damping between 1 - 6% as required

FLOOR IN RAISED POSITION

Illustrated housing is for 4" thick floating floors.

†Requires 2" min. Air Gap

TYPE RISFD DIMENSIONS

Type & Size	Housing Dimensions A	Housing Dimensions B	Air Gap C	Floor Thickness D	Overall Height E
RISFD-	3 1/4" (83 mm)	2 1/2" (65 mm)	Most Common 1" or 2" (25 or 50 mm) Occasionally 3" or 4" (75 or 100 mm)	Minimum 3" (75 mm)† Most Common 4" (100 mm) Occasionally 6" thru 12" (150 -300 mm)	Air Gap plus Floor Thickness

MASON LAYOUT DRAWING NO. : _____

TYPE	QTY.	TAG

FORM S-020 09/2008	DWN:	CHKD:	DATE:	DWG. No.